HSF Pb RoHS

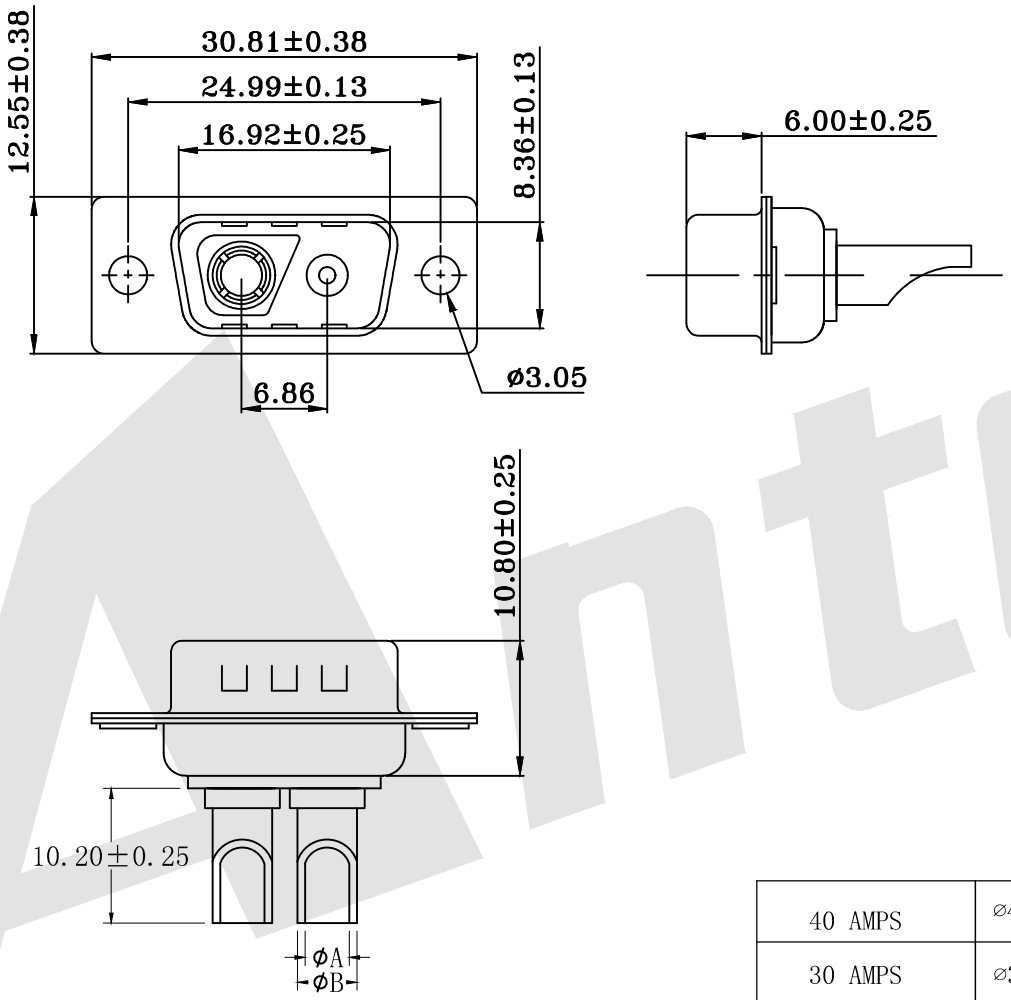

NOTE:
POWER CONTACTS COME
PRE-LOADED INTO INSULATORS

40 AMPS	⌀4.6	⌀5.5
30 AMPS	⌀3.4	⌀4.4
20 AMPS	⌀2.6	⌀3.6
10 AMPS	⌀1.75	⌀2.54
Current Rating	⌀A	⌀B

Dimension

SPECIFICATIONS:

ELECTRICAL:

INSULATOR RESISTANCE:	5,000 MegOHMS Min.
DIELECTRIC WITHSTANDING:	1,000 VAC r.m.s.
OPERATING TEMPERATURE:	-55℃～+125℃
CONTACT RESISTANCE:	30 MILLIOHMS Max.
POWER PINS:	SEE PART No. BELOW

MECHANICAL:

CONTACT INSERTION FORCE:	4.5kg Max
CONTACT SEPARATOR FORCE:	0.3kg Min

MATERIALS:

CONTACTS:	BRASS
INSULATOR:	PBT UL94V-0 RATED, 230℃ PROCESS TEMP。

SHELL: STEEL

FINISH:

SHELL: NICKEL

Ordering Code:

PDB2V2 -M -G0 -B -20
① ② ③ ④ ⑤

① Series
② Contact Type:
M:Male F:Female
③ Contact NO.:
G0: Gold flash
G1: 3u″ Gold
G2: 5u″ Gold
G3: 10u″ Gold
G4: 15u″ Gold
G5: 30u″ Gold
④ Insulation Color Code:
B:Black L:Blue
W:White
⑤ Power AMP:
10 = 10AMPS;
20 = 20AMPS;
30 = 30AMPS;
40 = 40AMPS;

REV	DESCRIPTION	DATE

Unless Otherwise specified tolerance
X. ±0.35 X.XX: ±0.20
X.X: ±0.25 X.XXX: ±0.15

SCALE: As Shown	UNIT: mm
DRAW Lv Xun Hua	DATE 05/05/2019
CHECK BobYang	DATE 05/05/2019

3rd ANGLE PROJECTION

ANTENK ELECTRONICS CO,.LTD
Http://www.antenk.com
E-mail:sales@antenk.com

TITLE: POWER D-SUB 2V2 SOLDER CUP-MALE

DRAWING NO: PDB2V2-MXXX

PRODUCT NO: PDB2V2-MXXX